TITGEMEYER GTO

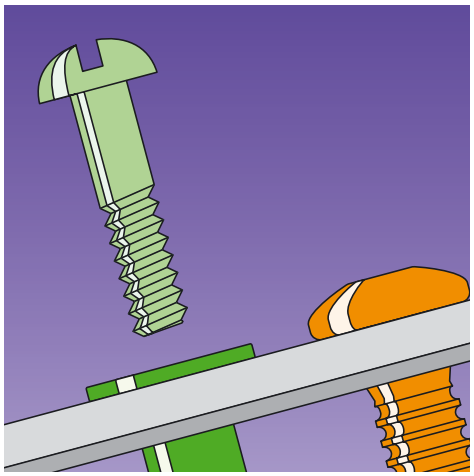

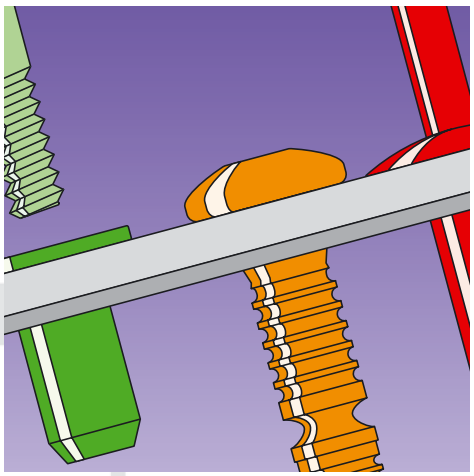

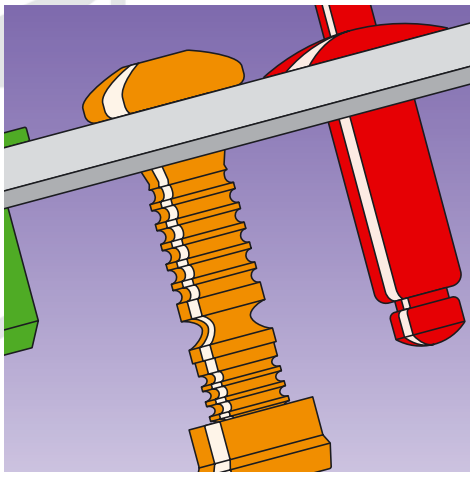

Fastening Technology
Stainless steel, corrosion resistant

TITGEMEYER Tb1485GB(0211)1

The technical data quoted in this catalogue, performance descriptions, recommendations and instructions e.g. for the installation of the components available from us, are without liability. These are based on our experience.
Claims against us as a consequence are expressly excluded as much of the application of our goods remains outside our direct influence.

It is a fundamental obligation of the user to ascertain and to decide wether the goods provided by us are appropriate for a particular application.

Subject to change.
Supply of goods is in conformity with our delivery and payment conditions.

Gebr. TITGEMEYER GmbH & Co. KG
Osnabrück

Over 100 years of tradition and expertise

At the turn of the century, an ironware wholesale business was established by the two Titgemeyer brothers, Adolf and Fritz, in their hometown of Melle. A few years later, offices were opened in the neighbouring town of Osnabrück. Since then, the business enterprise group TITGEMEYER has continuously developed and is totday a leader in the fields of fastening technology and commercial vehicle equipment. The medium sized family organization is now led by the third generation - always with the aim of supplying the optimum solution for the customer - from single fixings, right up to complex vehicle systems.

Fastening Technology

The more varied the requirements, the more individual our solution is.
The result: an extensive product range of fastening technology systems and solutions. New products are constantly being developed, as the manufacturing industry demands specially designed solutions.
TITGEMEYER introduced the POP® blind rivet to the German market.
Its application revolutionised traditional fastening technology.

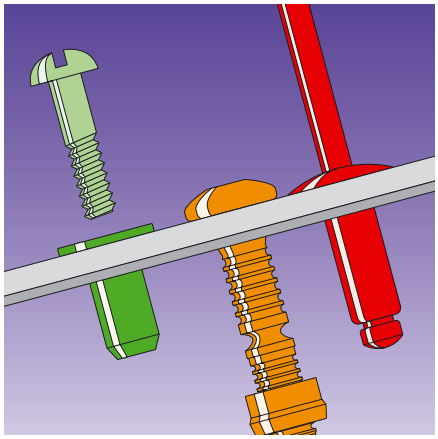

The TITGEMEYER fastening technology product range

- Blind Rivets
- Threaded Inserts
- Assembly Systems
- Installation Tools

Vehicle components with style

The ideas and wishes of our customers are our benchmark. That is why we carefully develop approved products and systems for the manufacture of modern commercial vehicles. Safety, cost effectiveness and the environment - these requirements are all satisfied by our product range. The original and innovative body kit system, GETO® VAN, is only one of many system solutions available from TITGEMEYER today.

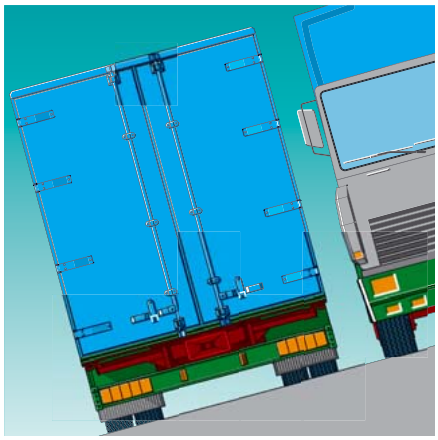

The TITGEMEYER commercial vehicle product range

- Body Kits
- Chassis Technology
- Bodywork Components
- Bodywork Systems
- Sealants and Adhesives

Applications

Stainless steel in industry

The range of applications using corrosion resistant stainless steels has expanded greatly in recent years. Examples include the offshore and environmental technology sectors, where increased efforts to make use of alternative energy sources require innovative fastening technology solutions involving highly corrosion resistant materials.

This catalogue is designed to give design engineers, project leaders and purchasers a brief overview of our range of fastening technology in corrosion resistant stainless steel.

Depending on the number of parts required, we can also supply special fasteners in materials with a corrosion resistance that is even greater than that of our standard range. The availability of these fasteners depends on each individual application. Please contact us for further details.

V4A: used in the construction of industrial and chemical plants

V4A: used in the on- and offshore energy technology sector

V2A: used in the construction of railway rolling stock

What are corrosion resistant steels?

Corrosion resistant steels are known to stand up well to corrosion in comparison to their unalloyed and low-allow equivalents. They are resistant to various aggressive substances and require no additional surface protection.
This passivation effect is achieved by the use of ferrous alloys containing at least 10.5% chromium. The passivated layer regenerates spontaneously if the surface is mechanically damaged. The corrosion resistance of "corrosion free stainless steel" depends mainly on the composition of its alloy, followed by its surface quality and structure.

Austenitic stainless steel is the variety most widely used in the manufacture of standard fasteners. These types are generally referred to as “V2A” or “A2” and “V4A” or “A4”.

Austenitic chromium-nickel steels containing more than 8% nickel offer an especially favourable combination of workability, mechanical properties and resistance to corrosion. They are therefore recommended for use in many applications, and are the most significant group of corrosion resistant steels. The most important property of this group of steels is their high resistance to corrosion, which increases with the alloy’s chromium and molybdenum content in particular.

V2A steels 1.4301 and 1.4303 stand up well to normal outdoor conditions and are therefore equally suitable for both indoor and outdoor use. V4A steels 1.4578 and 1.4571 can, for example, also withstand – to a certain extent – an atmosphere containing chloride or sulphur dioxide at room temperature, which makes them suitable for use on industrial premises and in coastal areas. More-extreme conditions require high-alloy steels such as 1.4529, which is specifically designed to withstand seawater.

Contact between corrosion resistant stainless steel and other materials

Apart from the corrosion that typically occurs on certain surfaces and around gaps and holes, design engineers also have to pay special attention to the bimetal corrosion caused by the combined use of different types of materials.

Bimetal corrosion (also known as contact corrosion) can occur when different metallic elements come into contact with each other in the presence of an electrolyte. The less noble of the two metals (the anode) is attacked at the contact point, where it begins to dissolve. The more noble metal (the cathode) is not affected. This means in practice that corrosion resistant steels normally act as the cathode when they come into contact with other metals, such as unalloyed and low-alloy steel or aluminium.

Corrosion of this type often occurs when the surface area of the cathode (i.e. the more noble material) is greater than that of its anode counterpart. Individual decisions therefore have to be taken regarding the combinations of materials to be used.

STANDARDS applying to corrosion resistant stainless steel

Standards		Remarks
DIN EN 10088	Parts 1–3	Corrosion resistant steels
DIN EN 10263	Part 5	Wire rod Rods and wire made of cold-heading and cold-extrusion steels

Categories

Category	Material conforming to DIN EN	Material conforming to AISI	Page	Areas of application
V2A	z. B. 1.4301/1.4303/ 1.4567	z. B. 304. 304L.305.308. 304 CU	7 – 20	In a normal outdoor atmosphere, for indoor and outdoor applications
V4A	z. B. 1.4578 / 1.4571	z. B. 316 Tl	21 – 26	e.g. in an industrial atmosphere e.g. under certain coastal conditions in an atmosphere containing chloride and sulphur dioxide
Very high-alloy austenite	z. B. 1.4529. 1.4539	z. B. 904 L	**On request**[1]	Under extreme conditions Resistant to seawater

[1] Very high-alloy austenite can be found in increasing numbers of industrial applications, where demand is strong for connecting and joining elements made of this material.
Titgemeyer is also your competent partner in this area. Please contact us for further details, and to discuss your exact manufacturing needs and how we can meet them!

Contents

Note:
We normally only supply weld studs and lockbolts in V2A material, although they can be supplied to special order in V4A material. Quantities and delivery times depend on the specification..

V2A stainless steel

- **Blind rivets**
- **Blind rivet nuts**
- **Lockbolts**
- **POLYSTIC weld studs**

- For normal outdoor atmosphere
- Indoor and outdoor applications

POP® Standard blind rivets

Dome head

Material

Sleeve
nickel/copper alloy 70/30
zinc

Mandrel
stainless steel 1.4303

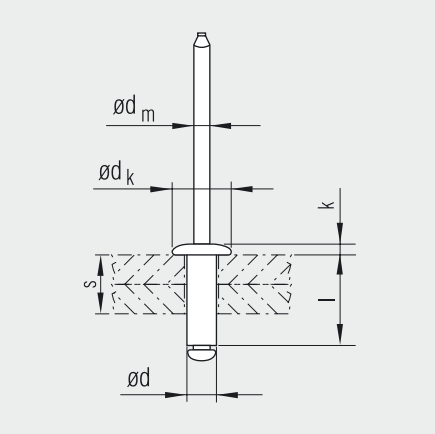

Nominal size-ø d [mm]	Hole-ø [mm]	Grip range s [mm]	Sleeve length l +1.0 -0.2 [mm]	Head ø d_K ±0.3 [mm]	Head Height k ±0.2 [mm]	Mandrel ø d_m nom [mm]	Strength[1] nominal Shear [N]	Strength[1] nominal Tensile [N]	**Part No.**
3.2	3.3	1.8 – 3.1	6.2	6.3	1.0	1.9	1750	2500	**307 351**
		3.1 – 4.3	7.5	6.3	1.0	1.9	1750	2500	**307 352**
		4.3 – 5.8	9.0	6.3	1.0	1.9	1750	2500	**307 353**
		5.8 – 7.1	10.3	6.3	1.0	1.9	1750	2500	**307 354**
4.0	4.1	1.3 – 2.5	6.2	7.9	1.2	2.3	3000	4000	**307 411**
		2.5 – 4.1	7.8	7.9	1.2	2.3	3000	4000	**307 412**
		4.1 – 5.8	9.5	7.9	1.2	2.3	3000	4000	**307 413**
		5.8 – 6.6	10.3	7.9	1.2	2.3	3000	4000	**307 414**
		6.6 – 7.9	11.5	7.9	1.2	2.3	3000	4000	**307 415**
4.8	4.9	– 2.3	6.2	8.1	1.2	2.9	3300	3750	**307 510**
		2.3 – 3.8	7.7	8.1	1.2	2.9	3300	3750	**307 511**
		3.8 – 5.1	9.3	8.1	1.2	2.9	3300	3750	**307 512**
		5.1 – 5.8	10.0	8.1	1.2	2.9	3300	3750	**307 513**
		5.8 – 8.6	12.8	8.1	1.2	2.9	3300	3750	**307 514**
		8.6 – 12.4	16.5	8.1	1.2	2.9	3300	3750	**307 515**
		12.5 – 15.0	19.0	8.1	1.2	2.9	3300	3750	**307 516**

[1] *Minimum based on rivet failure*

We reserve the right to amend specifications at any time.

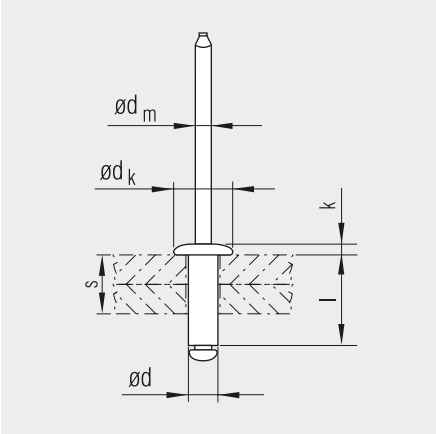

Dome head

Material

Sleeve
stainless steel 1.4303

Mandrel
stainless steel 1.4541

Nominal size-ø d [mm]	Hole-ø [mm]	Grip range s [mm]	Sleeve length l +1.0 -0.2 [mm]	Head ø d_K ±0.3 [mm]	Head Height k ±0.2 [mm]	Mandrel ø d_m nom [mm]	Strength[1] nominal Shear [N]	Strength[1] nominal Tensile [N]	**Part No.**
3.2	3.3	1.6 – 3.2	6.4	6.4	1.0	1.9	2400	3000	**303 311**
		3.2 – 4.8	8.0	6.4	1.0	1.9	2400	3000	**303 312**
		4.8 – 6.4	9.5	6.4	1.0	1.9	2400	3000	**303 313**
		6.4 – 9.5	12.7	6.4	1.0	1.9	2400	3000	**303 314**
		9.5 – 12.7	15.9	6.4	1.0	1.9	2400	3000	**303 315**
4.0	4.1	1.6 – 3.2	7.0	8.0	1.1	2.4	4000	5000	**303 411**
		3.2 – 6.4	10.2	8.0	1.1	2.4	4000	5000	**303 412**
		6.4 – 9.5	13.3	8.0	1.1	2.4	4000	5000	**303 413**
4.8	4.9	1.6 – 3.2	7.6	9.5	1.3	2.9	4400	6100	**303 511**
		3.2 – 6.4	10.8	9.5	1.3	2.9	4400	6100	**303 512**
		6.4 – 9.5	14.0	9.5	1.3	2.9	4400	6100	**303 513**
		9.5 – 12.7	17.2	9.5	1.3	2.9	4400	6100	**303 514**

[1] *Minimum based on rivet failure*

On request: • Large dome head
• Countersunk head

We reserve the right to amend specifications at any time.

POP® closed end blind rivets

Dome head

Material

Sleeve
stainless steel 1.4303

Mandrel
stainless steel 1.4303

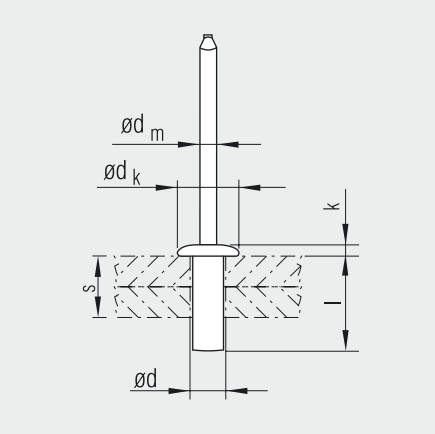

Nominal size-ø d [mm]	Hole-ø [mm]	Grip range s [mm]	Sleeve length l +1.0 -0.2 [mm]	Head ø d_K ±0.3 [mm]	Head Height k ±0.2 [mm]	Mandrel ø d_m nom [mm]	Strength[1] nominal Shear [N]	Strength[1] nominal Tensile [N]	**Part No.**
4.8	4.9	2.0 – 4.5	12.3	9.3	1.1	3.0	4300	4800	**319 451**
		3.5 – 6.0	13.7	9.3	1.1	3.0	4300	4800	**319 452**
		6.5 – 9.0	16.8	9.3	1.1	3.0	4300	4800	**319 453**
		9.0 – 11.5	19.7	9.3	1.1	3.0	4300	4800	**319 454**

[1] *Minimum based on rivet failure*

Note: Grooved mandrel!

We reserve the right to amend specifications at any time.

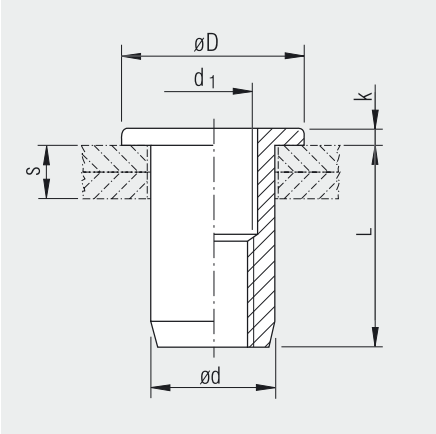

Flat head
Round body
Open end

Material

Stainless steel 1.4567

Thread d_1	Grip range s [mm]	Hole-ø [mm]	Body-ø d [mm]	Head-ø D [mm]	Head height k [mm]	Body length L [mm]	Part No. Stainless steel
M 4	0.5 – 2.0	6.1	6.0	9.0	1.0	11.0	**334 225**
	2.0 – 3.5	6.1	6.0	9.0	1.0	12.5	**334 226**
M 5	0.5 – 3.0	7.1	7.0	10.0	1.0	11.5	**334 266**
	3.0 – 5.0	7.1	7.0	10.0	1.0	15.0	**334 267**
M 6	0.5 – 3.0	9.1	9.0	12.0	1.5	14.5	**334 716**
	3.0 – 5.0	9.1	9.0	12.0	1.5	16.5	**334 717**
	5.0 – 7.0	9.1	9.0	12.0	1.5	18.5	**–**
M 8	0.5 – 3.0	11.1	11.0	15.0	1.5	16.0	**334 855**
	3.0 – 5.5	11.1	11.0	15.0	1.5	18.5	**334 856**
M 10	0.8 – 3.0	12.2	12.0	15.0	1.0	18.5	**334 985**
	3.0 – 5.0	12.2	12.0	15.0	1.0	20.5	**334 986**

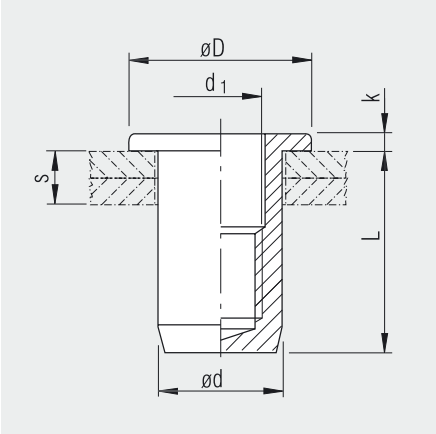

Flat head
Round body
Closed end

Material

Stainless steel 1.4567

Thread d_1	Grip range s [mm]	Hole-ø [mm]	Body-ø d [mm]	Head-ø D [mm]	Head height k [mm]	Body length L [mm]	Part No. Stainless steel
M 4	0.5 – 2.0	6.1	6.0	9.0	1.0	15.0	**334 207**
M 5	0.5 – 3.0	7.1	7.0	10.0	1.0	17.5	**334 242**
M 6	0.5 – 3.0	9.1	9.0	12.0	1.5	21.5	**334 691**
M 8	0.5 – 3.0	11.1	11.0	15.0	1.5	23.5	**334 841**

We reserve the right to amend specifications at any time.

RIV-TI® blind rivet nuts

Countersunk head
Round body
Open end

Material

Stainless steel 1.4567

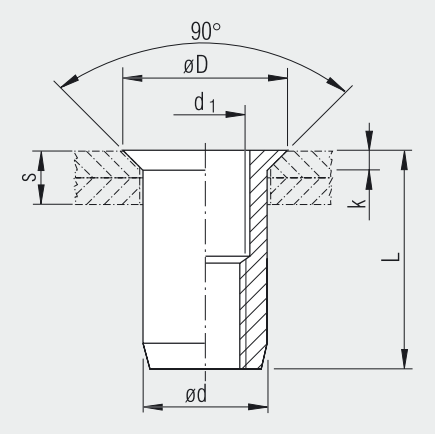

Thread d_1	Grip range s [mm]	Hole-ø [mm]	Body-ø d [mm]	Head-ø D [mm]	Head height k [mm]	Body length L [mm]	Part No. Stainless steel
M 4	1.2 – 3.0	6.1	6.0	8.0	1.0	12.0	**334 236**
M 5	1.2 – 3.5	7.1	7.0	9.0	1.0	12.0	**334 276**
M 6	1.7 – 4.5	9.1	9.0	12.0	1.5	17.0	**334 726**
M 8	1.7 – 4.5	11.1	11.0	14.0	1.5	17.5	**334 865**
	4.5 – 6.5	11.1	11.0	14.0	1.5	19.5	**334 864**
M 10	1.7 – 4.5	12.2	12.0	15.0	1.5	20.0	**334 994**

We reserve the right to amend specifications at any time.

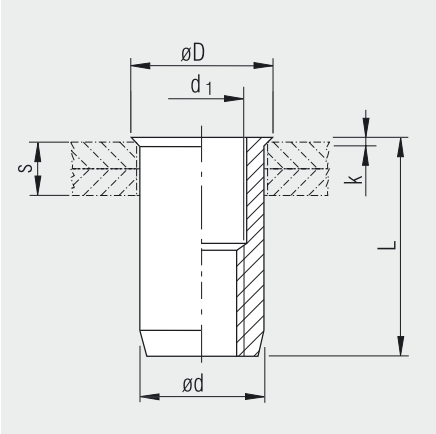

Slim head
Round body
Open end
(holes not countersunk)

Material

Stainless steel 1.4567

Thread d_1	Grip range s [mm]	Hole-ø [mm]	Body-ø d [mm]	Head-ø D [mm]	Head height k [mm]	Body length L [mm]	Part No. Stainless steel
M 4	0.5 – 2.0	6.1	6.0	6.5	0.5	11.0	**334 260**
M 5	0.5 – 3.0	7.1	7.0	7.5	0.5	12.0	**334 283**
M 6	0.5 – 3.0	9.1	9.0	9.5	0.5	14.5	**334 293**
M 8	0.5 – 3.0	11.1	11.0	11.5	0.5	16.0	**334 303**
	3.0 – 5.5	11.1	11.0	11.5	0.5	18.5	**334 304**

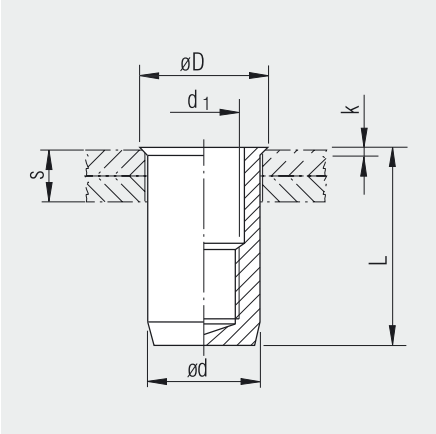

Slim head
Round body
Closed end
(holes not countersunk)

Material

Stainless steel 1.4567

Thread d_1	Grip range s [mm]	Hole-ø [mm]	Body-ø d [mm]	Head-ø D [mm]	Head height k [mm]	Body length L [mm]	Part No. Stainless steel
M 4	0.5 – 2.0	6.1	6.0	6.5	0.5	15.5	**334 373**
M 5	0.5 – 3.0	7.1	7.0	7.5	0.5	18.0	**334 383**
M 6	0.5 – 3.0	9.1	9.0	9.5	0.5	21.5	**334 393**
M 8	0.5 – 3.0	11.1	11.0	11.5	0.5	24.0	**334 396**

We reserve the right to amend specifications at any time.

Flat head
Part Hex body
Open end

Material

Stainless steel 1.4567

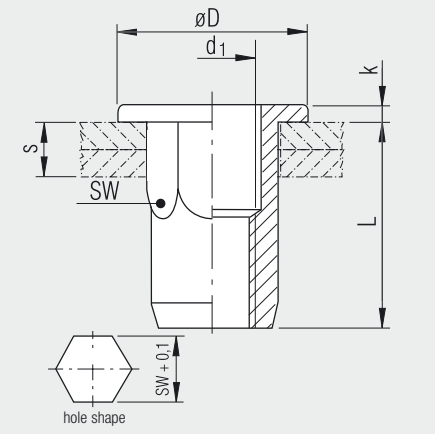

Thread d_1	Grip range s [mm]	Hole A/F [mm]	Body A/F SW [mm]	Head-ø D [mm]	Head height k [mm]	Body length L [mm]	Part No. Stainless steel
M 4	0.5 – 2.0	6.1	6.0	9.0	1.0	11.0	**334 135**
M 5	0.5 – 3.0	7.1	7.0	10.0	1.0	11.5	**334 155**
M 6	0.5 – 3.0	9.1	9.0	12.0	1.5	14.5	**334 175**
M 8	0.5 – 3.0	11.1	11.0	15.0	1.5	16.0	**334 185**

Flat head
Part Hex body
Closed end

Material

Stainless steel 1.4567

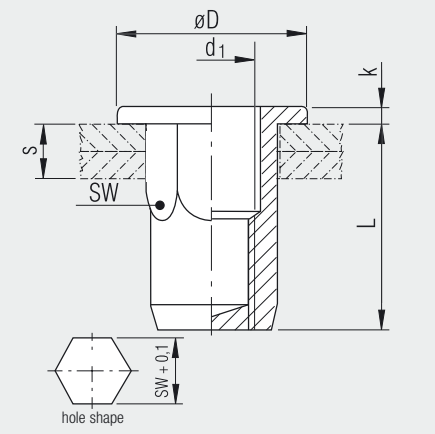

Thread d_1	Grip range s [mm]	Hole A/F [mm]	Body A/F SW [mm]	Head-ø D [mm]	Head height k [mm]	Body length L [mm]	Part No. Stainless steel
M 4	0.5 – 2.0	6.0	6.0	9.0	1.0	15.0	**334 425**
M 5	0.5 – 3.0	7.0	7.0	10.0	1.0	17.5	**334 427**
M 6	0.5 – 3.0	9.0	9.0	12.0	1.5	21.5	**334 429**
M 8	0.5 – 3.0	11.0	11.0	15.0	1.5	23.5	**334 431**

We reserve the right to amend specifications at any time.

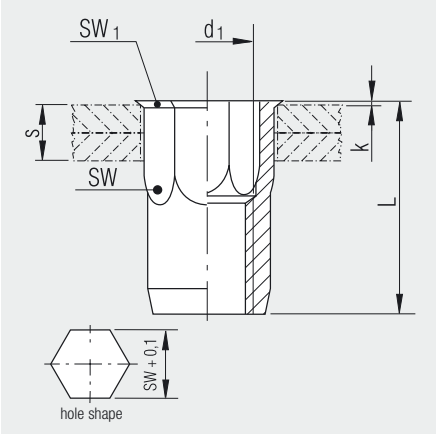

Slim head
Part Hex body
Open end

Material

Stainless steel 1.4567

Thread d_1	Grip range s [mm]	Hole A/F [mm]	Body A/F SW [mm]	Head A/F SW_1 [mm]	Head height k [mm]	Body length L [mm]	**Part No.** **Stainless steel**
M 4	0.5 – 2.0	6.1	6.0	6.5	0.5	11.0	**334 142**
M 5	0.5 – 3.0	7.1	7.0	7.5	0.5	12.0	**334 162**
M 6	0.5 – 3.0	9.1	9.0	9.5	0.5	14.5	**334 182**
	3.0 – 5.0	9.1	9.0	9.5	0.5	16.5	**334 183**
	5.0 – 7.0	9.1	9.0	9.5	0.5	18.5	**–**
M 8	0.5 – 3.0	11.1	11.0	11.5	0.5	16.0	**334 192**

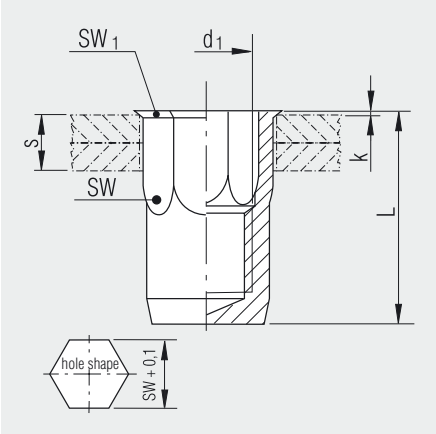

Slim head
Part Hex body
Closed end

Material

Stainless steel 1.4567

Thread d_1	Grip range s [mm]	Hole A/F [mm]	Body A/F SW [mm]	Head A/F SW_1 [mm]	Head height k [mm]	Body length L [mm]	**Part No.** **Stainless steel**
M 4	0.5 – 2.0	6.1	6.0	6.5	0.5	15.5	**334 421**
M 5	0.5 – 3.0	7.0	7.0	7.5	0.5	18.0	**334 460**
	3.0 – 5.0	7.0	7.0	7.5	0.5	20.5	**334 461**
M 6	0.5 – 3.0	9.0	9.0	9.5	0.5	21.5	**334 462**
	3.0 – 5.0	9.0	9.0	9.5	0.5	23.5	**334 463**
M 8	0.5 – 3.0	11.0	11.0	11.5	0.5	24.0	**334 466**
	3.0 – 5.0	11.0	11.0	11.5	0.5	26.5	**334 467**

We reserve the right to amend specifications at any time.

Lockbolt-systems Standard
Lockbolts

Brazier head

Material

Stainless steel 1.4567

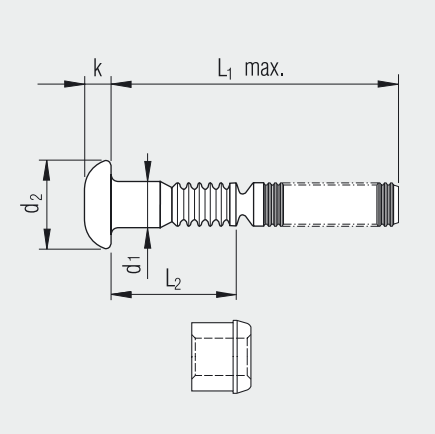

Nominal pin ø [mm]	Hole-ø [mm]	Grip range [mm]	Dimensions L_1 max [mm]	L_2 max [mm]	d_1 [mm]	d_2 [mm]	k max [mm]	Strength Shear [N]	Tensile [N]	Clamp [N]	Part No. Collar standard Stainless steel	Pin Stainless steel
5.0	$5.2^{-0.2}$	1.6 – 4.8	38.5	10.8	$5.0^{-0.2}$	$10.0^{-1.0}$	3.2	7900	6400	4500	376 370	**376 474**
		3.2 – 6.4	40.0	12.4	$5.0^{-0.2}$	$10.0^{-1.0}$	3.2	7900	6400	4500	376 370	**376 476**
		4.8 – 7.9	41.5	14.0	$5.0^{-0.2}$	$10.0^{-1.0}$	3.2	7900	6400	4500	376 370	**376 484**
		6.4 – 9.5	43.0	15.6	$5.0^{-0.2}$	$10.0^{-1.0}$	3.2	7900	6400	4500	376 370	**376 473**
		7.9 – 11.1	44.5	17.2	$5.0^{-0.2}$	$10.0^{-1.0}$	3.2	7900	6400	4500	376 370	**376 487**
		11.1 – 14.3	48.0	20.4	$5.0^{-0.2}$	$10.0^{-1.0}$	3.2	7900	6400	4500	376 370	**376 489**
6.5	$6.8^{-0.2}$	1.6 – 4.8	42.0	13.2	$6.6^{-0.2}$	$13.4^{-1.4}$	3.9	15000	13900	8000	376 371	**376 475**
		4.8 – 7.9	45.0	16.4	$6.6^{-0.2}$	$13.4^{-1.4}$	3.9	15000	13900	8000	376 371	**376 486**
		7.9 – 11.1	48.5	19.6	$6.6^{-0.2}$	$13.4^{-1.4}$	3.9	15000	13900	8000	376 371	**376 488**
		11.1 – 14.3	51.5	22.7	$6.6^{-0.2}$	$13.4^{-1.4}$	3.9	15000	13900	8000	376 371	**376 490**
		14.3 – 17.5	55.0	25.9	$6.6^{-0.2}$	$13.4^{-1.4}$	3.9	15000	13900	8000	376 371	**376 491**
10.0	$10.0^{-0.2}$	3.2 – 9.5	57.5	21.4	$9.8^{-0.2}$	$20.0^{-2.0}$	6.3	29000	27000	17500	376 373	**–**
		6.4 – 12.7	60.5	24.6	$9.8^{-0.2}$	$20.0^{-2.0}$	6.3	29000	27000	17500	376 373	**–**
		9.5 – 15.9	63.5	27.8	$9.8^{-0.2}$	$20.0^{-2.0}$	6.3	29000	27000	17500	376 373	**376 478**
		12.7 – 19.1	67.0	30.9	$9.8^{-0.2}$	$20.0^{-2.0}$	6.3	29000	27000	17500	376 373	**376 479**
		15.9 – 22.2	70.0	34.1	$9.8^{-0.2}$	$20.0^{-2.0}$	6.3	29000	27000	17500	376 373	**–**

The tensile and clamp strengths are average values determined during testing.

Lockbolt systems have a defined grip range.
These grip ranges refer to the use of a standard collar. If flange collars or low profile collars are used, the grip range changes.
Technical data is given in the collar tables.
Collars must be ordered separately.

We will also be pleased to supply lockbolts and collars in V4A material. Please contact us for details.

We reserve the right to amend specifications at any time.

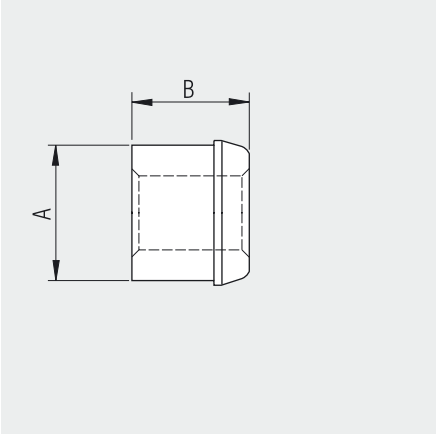

Standard collars

Material

Stainless steel 1.4567

Standard collard

For nominal pin ø [mm]	Dimensions A min [mm]	Dimensions B max [mm]	Part No. Stainless steel
5.0	7.7	6.2	**376 370**
6.5	10.1	8.2	**376 371**
10.0	14.9	11.9	**376 373**

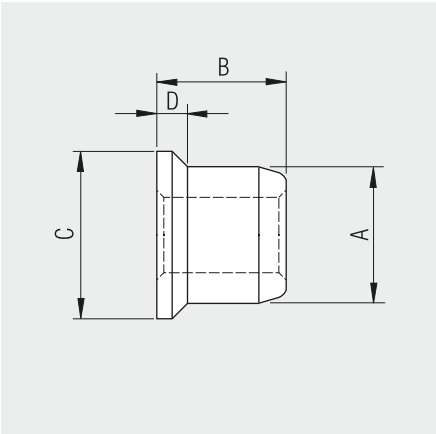

Flange collars

Material

Stainless steel 1.4567

Flange collard

For nominal pin ø [mm]	Dimensions A min [mm]	Dimensions B min [mm]	Dimensions C max [mm]	Dimensions D[1] max [mm]	Part No. Stainless steel
5.0	7.7	7.0	10.0	1.6	**376 386**
6.5	10.1	9.5	13.2	2.0	**376 387**

[1] *When using flanged collars the grip range is reduced by dimension D, compared to the grip range for standard collars.*

All collars are lubricated.

We reserve the right to amend specifications at any time.

POLYSTIC® assembly systems
Weld studs

With metric thread
with CD pips
in accordance with EN ISO 13918

Material

Stainless steel 1.4301 or 1.4303

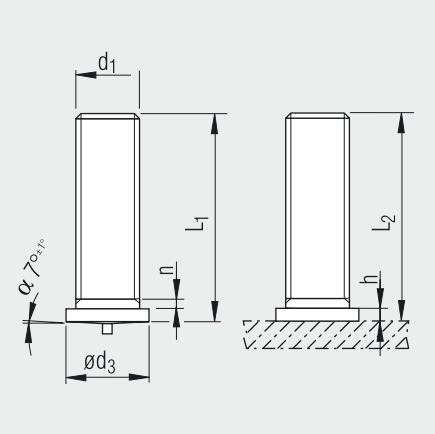

Thread d_1	Stud dimensions [mm]	Stud length L_1 +0.6 [mm]	Flange-ø d_3 ±0.2 [mm]	Flange height h [mm]	Thread undercut max [mm]	Stud length after welding L_2 ø [mm]	Part No. ■ Stainless steel
M 3	M 3 x 6	6.0	4.5	0.7 – 1.4	1.0	$\approx L_1^{\pm 0.3}$	**434 503**
	M 3 x 8	8.0	4.5	0.7 – 1.4	1.0	$\approx L_1^{\pm 0.3}$	**434 504**
	M 3 x 10	10.0	4.5	0.7 – 1.4	1.0	$\approx L_1^{\pm 0.3}$	**434 505**
	M 3 x 12	12.0	4.5	0.7 – 1.4	1.0	$\approx L_1^{\pm 0.3}$	**434 506**
	M 3 x 15	15.0	4.5	0.7 – 1.4	1.0	$\approx L_1^{\pm 0.3}$	**–**
	M 3 x 16	16.0	4.5	0.7 – 1.4	1.0	$\approx L_1^{\pm 0.3}$	**434 515**
	M 3 x 20	20.0	4.5	0.7 – 1.4	1.0	$\approx L_1^{\pm 0.3}$	**434 516**
	M 3 x 25	25.0	4.5	0.7 – 1.4	1.0	$\approx L_1^{\pm 0.3}$	**434 517**
	M 3 x 30	30.0	4.5	0.7 – 1.4	1.0	$\approx L_1^{\pm 0.3}$	**434 518**
M 4	M 4 x 6	6.0	5.5	0.7 – 1.4	1.0	$\approx L_1^{\pm 0.3}$	**434 523**
	M 4 x 8	8.0	5.5	0.7 – 1.4	1.0	$\approx L_1^{\pm 0.3}$	**434 524**
	M 4 x 10	10.0	5.5	0.7 – 1.4	1.0	$\approx L_1^{\pm 0.3}$	**434 525**
	M 4 x 12	12.0	5.5	0.7 – 1.4	1.0	$\approx L_1^{\pm 0.3}$	**434 526**
	M 4 x 15	15.0	5.5	0.7 – 1.4	1.0	$\approx L_1^{\pm 0.3}$	**434 527**
	M 4 x 16	16.0	5.5	0.7 – 1.4	1.0	$\approx L_1^{\pm 0.3}$	**434 528**
	M 4 x 20	20.0	5.5	0.7 – 1.4	1.0	$\approx L_1^{\pm 0.3}$	**434 530**
	M 4 x 25	25.0	5.5	0.7 – 1.4	1.0	$\approx L_1^{\pm 0.3}$	**434 532**
	M 4 x 30	30.0	5.5	0.7 – 1.4	1.0	$\approx L_1^{\pm 0.3}$	**434 534**
	M 4 x 35	35.0	5.5	0.7 – 1.4	1.0	$\approx L_1^{\pm 0.3}$	**434 536**
	M 4 x 40	40.0	5.5	0.7 – 1.4	1.0	$\approx L_1^{\pm 0.3}$	**–**
	M 4 x 45	45.0	5.5	0.7 – 1.4	1.0	$\approx L_1^{\pm 0.3}$	**–**
M 5	M 5 x 6	6.0	6.5	0.8 – 1.4	2.0	$\approx L_1^{\pm 0.3}$	**–**
	M 5 x 8	8.0	7.0	0.8 – 1.4	2.0	$\approx L_1^{\pm 0.3}$	**434 544**
	M 5 x 10	10.0	6.5	0.8 – 1.4	2.0	$\approx L_1^{\pm 0.3}$	**434 545**
	M 5 x 12	12.0	7.0	0.8 – 1.4	2.0	$\approx L_1^{\pm 0.3}$	**434 546**
	M 5 x 15	15.0	7.0	0.8 – 1.4	2.0	$\approx L_1^{\pm 0.3}$	**434 547**
	M 5 x 16	16.0	7.0	0.8 – 1.4	2.0	$\approx L_1^{\pm 0.3}$	**434 548**
	M 5 x 20	20.0	7.0	0.8 – 1.4	2.0	$\approx L_1^{\pm 0.3}$	**434 550**
	M 5 x 20	20.0	6.5	0.8 – 1.4	2.0	$\approx L_1^{\pm 0.3}$	**–**
	M 5 x 25	25.0	7.0	0.8 – 1.4	2.0	$\approx L_1^{\pm 0.3}$	**434 552**
	M 5 x 25	25.0	6.5	0.8 – 1.4	2.0	$\approx L_1^{\pm 0.3}$	**–**
	M 5 x 30	30.0	6.5	0.8 – 1.4	2.0	$\approx L_1^{\pm 0.3}$	**434 553**
	M 5 x 35	35.0	6.5	0.8 – 1.4	2.0	$\approx L_1^{\pm 0.3}$	**434 554**
	M 5 x 40	40.0	6.5	0.8 – 1.4	2.0	$\approx L_1^{\pm 0.3}$	**434 555**
	M 5 x 50	50.0	6.5	0.8 – 1.4	2.0	$\approx L_1^{\pm 0.3}$	**–**

We reserve the right to amend specifications at any time. We will also be pleased to supply weld studs in V4A material. Please contact us for details.

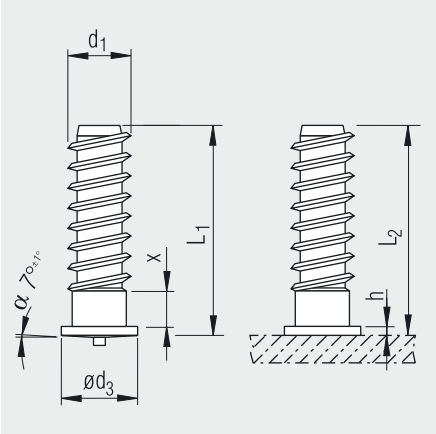

with fir-tree threads
with CD pips

Material

Stainless steel 1.4303 or 1.4301

Thread d_1	Stud dimensions [mm]	Stud length L_1 *+0.6* [mm]	Flange-ø d_3 *±0.2* [mm]	Flange height h [mm]	Thread undercut *max* [mm]	Stud length after welding L_2 ø [mm]	**Part No.** **Stainless steel**
T 5	T 5 x 9	9.0	6.5	0.7	3.0	$\approx L_1^{\pm 0.3}$	**434 216**
	T 5 x 10	10.0	6.5	0.7	3.0	$\approx L_1^{\pm 0.3}$	**–**
	T 5 x 12	12.0	6.5	0.7	3.0	$\approx L_1^{\pm 0.3}$	**434 217**
	T 5 x 14	14.0	6.5	0.7	3.0	$\approx L_1^{\pm 0.3}$	**434 226**
	T 5 x 14.2	14.2	6.5	0.7	3.2	$\approx L_1^{\pm 0.3}$	**–**
	T 5 x 16.5	16.0	6.5	0.7	3.0	$\approx L_1^{\pm 0.3}$	**–**
	T 5 x 18	18.0	6.5	0.7	3.0	$\approx L_1^{\pm 0.3}$	**434 236**
	T 5 x 20	20.0	6.5	0.7	3.0	$\approx L_1^{\pm 0.3}$	**–**
	T 5 x 25	25.0	6.5	0.7	3.0	$\approx L_1^{\pm 0.3}$	**–**
	T 5 x 30	30.0	6.5	0.7	5.0	$\approx L_1^{\pm 0.3}$	**–**
	T 5 x 35	35.0	6.5	0.7	3.0	$\approx L_1^{\pm 0.3}$	**–**

Faulty joints may occur when installing weld studs with dissimilar materials (e.g. ferritic, non-corrosive chromium steel). We strongly advise that you first conduct appropriate welding tests to establish whether the desired tensile strength and corrosion protection properties can be achieved using the chosen combination of materials.

We will also be pleased to supply weld studs in V4A material. Please contact us for details.

We reserve the right to amend specifications at any time.

POLYSTIC® assembly systems
Weld studs

with CD pips
in accordance with EN ISO 13918
- for weld stud with CD pips

Material

Stainless steel
1.4301 or 1.4303

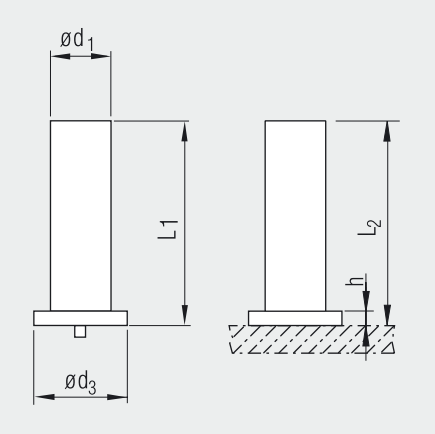

Stud-ø d_1 ±0.1 [mm]	Stud dimensions [mm]	Stud length L_1 +0.6 [mm]	Flange-ø d_3 ±0.2 [mm]	Flange height h [mm]	Stud length after welding L_2 [mm]	**Part No.** **Stainless steel**
3.0	3 x 6	6.0	4.5	0.7 – 1.4	$\approx L_1^{\pm 0.3}$	**434 934**
	3 x 8	8.0	4.5	0.7 – 1.4	$\approx L_1^{\pm 0.3}$	**434 935**
	3 x 10	10.0	4.5	0.7 – 1.4	$\approx L_1^{\pm 0.3}$	**–**
	3 x 12	12.0	4.5	0.7 – 1.4	$\approx L_1^{\pm 0.3}$	**434 937**
	3 x 15	15.0	4.5	0.7 – 1.4	$\approx L_1^{\pm 0.3}$	**–**
	3 x 20	20.0	4.5	0.7 – 1.4	$\approx L_1^{\pm 0.3}$	**–**
4.0	4 x 8	8.0	5.5	0.8 – 1.4	$\approx L_1^{\pm 0.3}$	**–**
	4 x 10	10.0	5.5	0.8 – 1.4	$\approx L_1^{\pm 0.3}$	**–**
	4 x 12	12.0	5.5	0.8 – 1.4	$\approx L_1^{\pm 0.3}$	**–**
	4 x 20	20.0	5.5	0.8 – 1.4	$\approx L_1^{\pm 0.3}$	**434 945**
	4 x 25	25.0	5.5	0.8 – 1.4	$\approx L_1^{\pm 0.3}$	**434 946**
	4 x 30	30.0	5.5	0.8 – 1.4	$\approx L_1^{\pm 0.3}$	**–**
5.0	5 x 6	6.0	6.5	0.8 – 1.4	$\approx L_1^{\pm 0.3}$	**–**
	5 x 12	12.0	6.5	0.8 – 1.4	$\approx L_1^{\pm 0.3}$	**–**
	5 x 15	15.0	6.5	0.8 – 1.4	$\approx L_1^{\pm 0.3}$	**–**
6.0	6 x 8	8.0	7.5	0.8 – 1.4	$\approx L_1^{\pm 0.3}$	**–**
	6 x 10	10.0	7.5	0.8 – 1.4	$\approx L_1^{\pm 0.3}$	**434 982**
	6 x 16	16.0	7.5	0.8 – 1.4	$\approx L_1^{\pm 0.3}$	**434 983**
	6 x 20	20.0	7.5	0.8 – 1.4	$\approx L_1^{\pm 0.3}$	**–**
	6 x 40	40.0	7.5	0.8 – 1.4	$\approx L_1^{\pm 0.3}$	**–**
	6 x 55	55.0	7.5	0.8 – 1.4	$\approx L_1^{\pm 0.3}$	**–**

Weld studs with CD pips in steel and stainless steel can be welded using our short-cycle drawn-arc welding machines and the PK 560 handheld welding gun.

Faulty joints may occur when installing weld studs with dissimilar materials (e.g. ferritic, non-corrosive chromium steel). We strongly advise that you first conduct appropriate welding tests to establish whether the desired tensile strength and corrosion protection properties can be achieved using the chosen combination of materials.

We will also be pleased to supply weld studs in V4A material. Please contact us for details.

We reserve the right to amend specifications at any time.

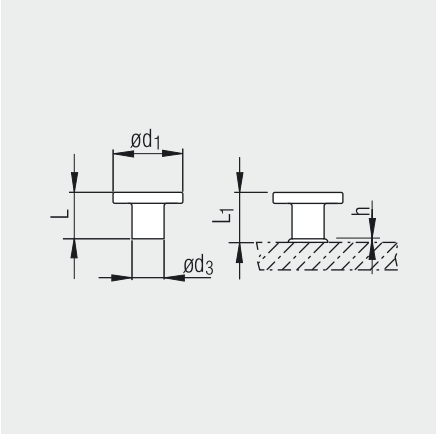

without CD pips

- for stud welding using drawn-arc processes
- for stud welding using short-cycle drawn-arc processes

Material

Stainless steel 1.4301 or 1.4303

Stud-ø d_3 ±0.10 **[mm]**	T-stud dimensions [mm]	Total length L +0.6 [mm]	Head-ø d_1 -0.05 / +0.15 [mm]	**Part No.** **Stainless steel**
3.0	3.0 x 3.9	3.9	5.0	**434 100**
	3.0 x 5.4	5.4	5.0	**434 120**
5.0	5.0 x 10.0	10.0	9.0	**434 110**

For total height L_1 and welding bead h, after welding, no details can be provided.
These dimensions depend on the surface coating applied to the base material and the resulting welding parameters.

The above weld studs can be installed using a hand welding gun or by semi-automatic or automatic processes.

We will also be pleased to supply weld studs in V4A material. Please contact us for details.

We reserve the right to amend specifications at any time.

STARLOCK® retaining washers

without cap

Material

Stainless steel 1.4310

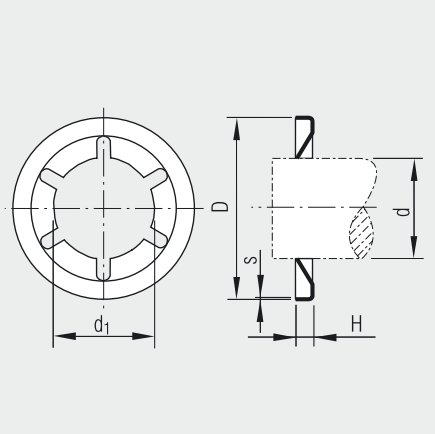

Spindle-ø d [mm]	Internal-ø d_1 [mm]	External-ø D *±0.3* [mm]	Height H *±0.2* [mm]	Material thickness S [mm]	Number of slits	Pull off force[2] [N]	**Part No.** ■ **Stainless steel**
1.6	1.23 – 1.46	9.7	1.3	0.20	4	200	**399 801**[1]
2.0	1.61 – 1.84	9.7	1.3	0.20	4	200	**399 802**
2.4	2.02 – 2.25	9.7	1.3	0.20	4	200	**399 803**[1]
3.0	2.58 – 2.81	9.7	1.3	0.20	4	200	**399 804**
3.2	2.78 – 3.01	9.7	1.3	0.20	4	200	**399 805**[1]
4.0	3.57 – 3.80	11.5	1.3	0.20	5	400	**399 806**
4.8	4.31 – 4.53	11.5	1.3	0.20	6	400	**399 807**
5.0	4.51 – 4.74	11.5	1.3	0.20	6	400	**399 808**
6.0	5.45 – 5.70	15.3	1.3	0.25	6	800	**399 809**
6.4	5.83 – 6.08	15.3	1.3	0.25	6	800	**399 810**[1]
7.0	6.46 – 6.72	15.3	1.3	0.25	6	800	**399 811**
8.0	7.40 – 7.66	15.3	1.3	0.25	6	800	**399 812**
9.0	8.50 – 8.75	18.4	1.9	0.30	6	1000	**399 813**
9.5	9.00 – 9.26	18.4	1.9	0.30	6	1000	**399 814**
10.0	9.49 – 9.74	18.4	1.9	0.30	6	1000	**399 815**
11.0	10.50 – 10.76	18.4	1.9	0.30	6	1000	**399 816**
12.0	11.37 – 11.62	25.0	2.3	0.40	6	2500	**399 817**
12.7	12.10 – 12.36	25.0	2.3	0.40	6	2500	**399 818**[1]
13.0	12.38 – 12.64	25.0	2.3	0.40	6	2500	**399 819**[1]
14.0	13.40 – 13.66	28.2	2.3	0.40	6	2500	**399 820**
15.0	14.43 – 14.68	28.2	2.3	0.40	6	2500	**399 821**[1]
16.0	15.28 – 15.53	28.2	2.3	0.40	6	2500	**399 822**
17.0	16.42 – 16.68	28.2	2.3	0.40	6	2500	**399 823**[1]
18.0	17.34 – 17.62	36.5	3.0	0.40	9	3500	**399 824**[1]
19.0	18.40 – 18.69	36.5	3.0	0.40	9	3500	**399 825**[1]
20.0	19.30 – 19.63	36.5	3.0	0.40	9	3500	**399 826**
21.0	20.33 – 20.61	36.5	3.0	0.40	9	3500	**399 827**[1]
22.0	21.37 – 21.65	36.5	3.0	0.40	9	3500	**399 828**[1]
23.0	22.34 – 22.62	38.1	2.9	0.45	9	3500	**399 829**[1]
24.0	23.33 – 23.66	38.1	3.2	0.50	9	3850	**–**
24.0	23.33 – 23.66	41.3	3.2	0.50	9	3850	**–**
25.0	24.30 – 24.63	41.3	3.2	0.50	9	3850	**–**

[1] *Not standard stock. These items will be manufactured to customer requirements.*
[2] *The pull off forces apply for steel parts and are based on tests using an untreated ST 37 h 11 steel spindle.*

Other surface finishes are available e.g. DELTA Tone + Seal (for spindle diameters from 12.0 mm) depending on quantity on request.
We reserve the right to amend specifications at any time.

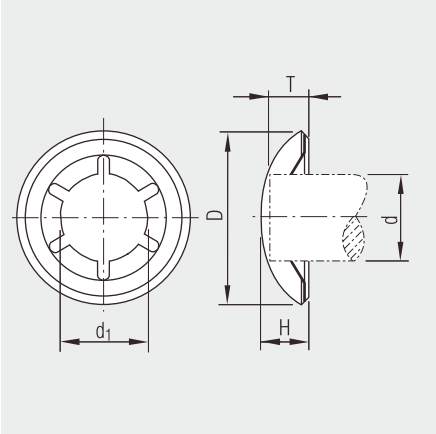

with stainless steel cap

Material

Stainless steel 1.4310 or 1.4016

Spindle-ø d [mm]	Internal-ø d_1 [mm]	External-ø D *±0.3* [mm]	Height H *±0.2* [mm]	Insertion depth T *max* [mm]	Number of slits	Pull off force[2] [N]	**Part No.** **Stainless steel**
1.6	1.23 – 1.46	10.6	3.0	2.5	4	200	**399 951**[1]
2.0	1.61 – 1.84	10.6	3.0	2.5	4	200	**399 952**[1]
2.4	2.02 – 2.25	10.6	3.0	2.5	4	200	**399 953**[1]
3.0	2.58 – 2.81	10.6	3.0	2.5	4	200	**399 954**
3.2	2.78 – 3.01	10.6	3.0	2.5	4	200	**399 955**[1]
4.0	3.57 – 3.80	12.4	3.8	3.0	5	400	**399 956**
4.8	4.31 – 4.53	12.4	3.8	3.0	6	400	**399 957**
5.0	4.51 – 4.74	12.4	3.8	3.0	6	400	**399 958**
6.0	5.45 – 5.70	16.2	5.0	4.0	6	800	**399 959**
6.4	5.83 – 6.08	16.2	5.0	4.0	6	800	**399 960**[1]
7.0	6.46 – 6.72	16.2	5.0	4.0	6	800	**399 961**
8.0	7.40 – 7.66	16.2	5.0	4.0	6	800	**399 962**
9.0	8.50 – 8.75	19.7	5.9	4.5	6	1000	**399 963**
9.5	9.00 – 9.26	19.7	5.9	4.5	6	1000	**399 964**[1]
10.0	9.49 – 9.74	19.7	5.9	4.5	6	1000	**399 965**
11.0	10.50 – 10.76	19.7	5.9	4.5	6	1000	**399 966**
12.0	11.37 – 11.62	26.0	7.5	6.0	6	2500	**399 967**
12.7	12.10 – 12.36	26.0	7.5	6.0	6	2500	**399 968**[1]
13.0	12.38 – 12.64	26.0	7.5	6.0	6	2500	**399 969**[1]
14.0	13.40 – 13.66	29.4	9.0	7.0	6	2500	**399 970**[1]
15.0	14.43 – 14.68	29.4	9.0	7.0	6	2500	**399 971**[1]
16.0	15.28 – 15.53	29.4	9.0	7.0	6	2500	**399 972**[1]
17.0	16.42 – 16.68	29.4	9.0	7.0	6	2500	**399 973**[1]
18.0	17.34 – 17.62	38.2	11.7	8.7	9	3500	**399 974**[1]
19.0	18.40 – 18.69	38.2	11.7	8.7	9	3500	**399 975**[1]
20.0	19.30 – 19.63	38.2	11.7	8.7	9	3500	**399 976**[1]
21.0	20.33 – 20.61	38.2	11.7	8.7	9	3500	**399 977**[1]
22.0	21.37 – 21.65	38.2	11.7	8.7	9	3500	**399 978**[1]
23.0	22.34 – 22.62	39.8	13.0	9.5	9	3500	**399 979**[1]
24.0	23.33 – 23.66	43.0	12.5	9.5	9	3850	**–**
25.0	24.30 – 24.63	43.0	12.5	9.5	9	3850	**–**

[1] *Not standard stock. These items will be manufactured to customer requirements.*
[2] *The pull off forces apply for steel parts and are based on tests using an untreated ST 37 h 11 steel spindle.*

Material thicknesses for STARLOCK® are the same as uncapped version
Other surface finishes are available e.g. DELTA Tone + Seal (for spindle diameters from 12.0 mm) depending on quantity on request.
We reserve the right to amend specifications at any time.

V4A stainless steel

- **Blind rivets**
- **Blind rivet nuts**
- **Lockbolts**
- **POLYSTIC weld studs**

- Suitable for use, for example, on industrial premises and in coastal areas
- Withstands chloride and sulphur dioxide under certain atmospheric conditions

Dome head
with grooved mandrel

Material

Sleeve
stainless steel 1.4404

Mandrel
stainless steel 1.4401

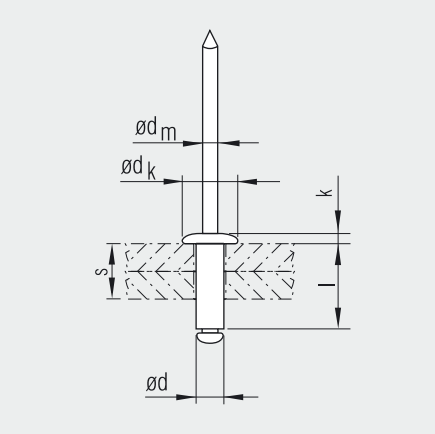

Nominal size-ø d [mm]	Hole-ø [mm]	Grip range s [mm]	Sleeve length l +1.0 -0.2 [mm]	Head ø d_k [mm]	Head Height k max [mm]	Mandrel ø d_m max [mm]	Strength[1] nominal Shear [N]	Strength[1] nominal Tensile [N]	Part No.
3.0	3.1	1.5 – 2.5	6.0	6.5	1.0	1.9	1600	2000	**427 200 001**
		2.5 – 4.5	8.0	6.5	1.0	1.9	1600	2000	**427 201 001**
3.2	3.3	4.5 – 6.5	10.0	6.5	1.0	1.9	1600	2000	**427 202 001**
		1.5 – 2.5	6.0	6.5	1.0	2.0	1800	2500	**427 210 001**
		2.5 – 4.5	8.0	6.5	1.0	2.0	1800	2500	**427 211 001**
4.0	4.1	4.5 – 6.5	10.0	6.5	1.0	2.0	1800	2500	**427 212 001**
		6.5 – 8.5	12.0	6.5	1.0	2.0	1800	2500	**427 213 001**
		– 2	6.0	8.0	1.3	2.5	3100	3800	**427 220 001**
		2.0 – 4.0	8.0	8.0	1.3	2.5	3100	3800	**427 221 001**
4.8	4.9	4.0 – 6.0	10.0	8.0	1.3	2.5	3100	3800	**427 222 001**
		7.0 – 9.0	13.0	8.0	1.3	2.5	3100	3800	**427 223 001**
		10.0 – 12.0	16.0	8.0	1.3	2.5	3100	3800	**427 224 001**
		1.5 – 3.0	8.0	9.5	1.4	2.9	4500	6000	**427 042 001**
		3.0 – 5.0	10.0	9.5	1.4	2.9	4500	6000	**427 231 001**
		5.0 – 7.0	12.0	9.5	1.4	2.9	4500	6000	**427 232 001**
		7.0 – 9.0	14.0	9.5	1.4	2.9	4500	6000	**427 233 001**
		9.0 – 11.0	16.0	9.5	1.4	2.9	4500	6000	**427 234 001**
		11.0 – 13.0	18.0	9.5	1.4	2.9	4500	6000	**427 235 001**

[1] *Minimum based on rivet failure*

We reserve the right to amend specifications at any time.

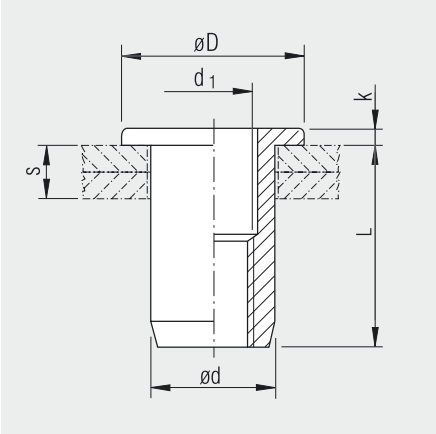

Flat head
Round body
Open end

Material

Stainless steel 1.4578

Thread d_1	Grip range s [mm]	Hole-ø [mm]	Body-ø d [mm]	Head-ø D [mm]	Head height k [mm]	Body length L [mm]	Part No. Stainless steel
M 4	0.5 – 2.0	6.1	6.0	9.0	1.0	11.0	**–**
M 5	0.5 – 3.0	7.1	7.0	10.0	1.0	11.5	**334 268**
M 6	0.5 – 3.0	9.1	9.0	12.0	1.5	14.5	**334 718**
	3.0 – 5.0	9.1	9.0	12.0	1.0	11.0	**–**
M 8	0.5 – 3.0	11.1	11.0	15.0	1.5	16.0	**334 870**

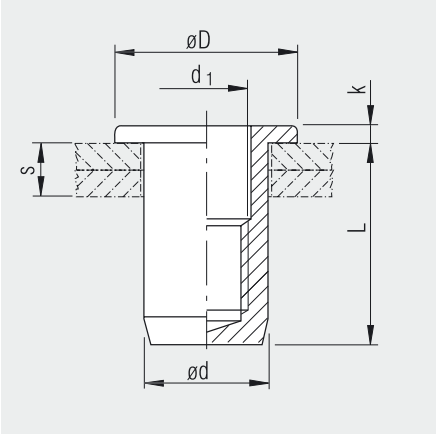

Flat head
Round body
Closed end

Material

Stainless steel 1.4578

Thread d_1	Grip range s [mm]	Hole-ø [mm]	Body-ø d [mm]	Head-ø D [mm]	Head height k [mm]	Body length L [mm]	Part No. Stainless steel
M 5	0.5 – 3.0	7.1	7.0	10.0	1.0	17.5	**334 445**
M 6	0.5 – 3.0	9.1	9.0	12.0	1.5	21.5	**334 698**
M 8	0.5 – 3.0	11.1	11.0	15.0	1.5	23.5	**334 843**

We reserve the right to amend specifications at any time.

RIV-TI® blind rivet nuts

Slim head
Round body
Open end
(holes not countersunk)

Material

Stainless steel 1.4578

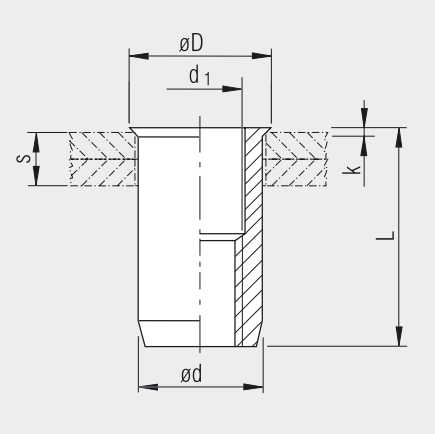

Thread d_1	Grip range s [mm]	Hole-ø [mm]	Body-ø d [mm]	Head-ø D [mm]	Head height k [mm]	Body length L [mm]	Part No. Stainless steel
M 4	0.5 – 2.0	6.1	6.0	6.5	0.5	11.0	**–**
M 5	0.5 – 3.0	7.1	7.0	7.5	0.5	12.0	**334 286**
M 6	0.5 – 3.0	9.1	9.0	9.5	0.5	14.5	**334 295**
M 8	0.5 – 3.0	11.1	11.0	11.0	0.5	16.0	**334 306**

Slim head
Round body
Closed end
(holes not countersunk)

Material

Stainless steel 1.4578

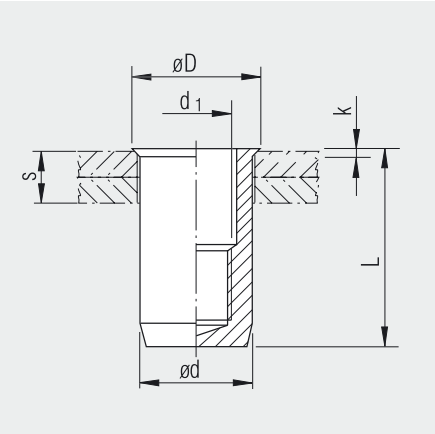

Thread d_1	Grip range s [mm]	Hole-ø [mm]	Body-ø d [mm]	Head-ø D [mm]	Head height k [mm]	Body length L [mm]	Part No. Stainless steel
M 5	0.5 – 3.0	7.1	7.0	7.5	0.5	18.0	**334 254**
M 6	0.5 – 3.0	9.1	9.0	9.5	0.5	21.5	**334 395**
M 8	0.5 – 3.0	11.1	11.0	11.5	0.5	24.0	**334 845**

We reserve the right to amend specifications at any time.

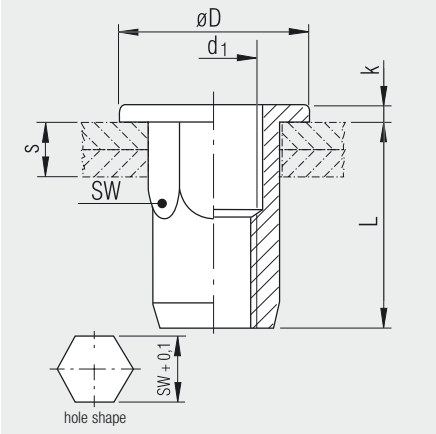

Flat head
Part Hex body
Open end

Material

Stainless steel 1.4578

Thread d_1	Grip range s [mm]	Hole A/F [mm]	Body A/F SW [mm]	Head-ø D [mm]	Head height k [mm]	Body length L [mm]	**Part No.** **Stainless steel**
M 4	0.5 – 2.0	6.1	6.0	9.0	1.0	11.0	**–**
M 5	0.5 – 3.0	7.1	7.0	10.0	1.0	11.5	**334 428**
M 6	0.5 – 3.0	9.1	9.0	12.0	1.5	14.5	**334 423**
M 8	0.5 – 3.0	11.1	11.0	15.0	1.5	16.0	**334 424**

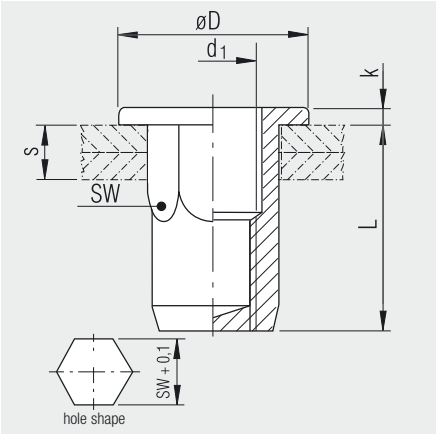

Flat head
Part Hex body
Closed end

Material

Stainless steel 1.4578

Thread d_1	Grip range s [mm]	Hole A/F [mm]	Body A/F SW [mm]	Head-ø D [mm]	Head height k [mm]	Body length L [mm]	**Part No.** **Stainless steel**
M5	0.5 – 3.0	7.0	7.0	10.0	1.0	17.5	**334 443**
M6	0.5 – 3.0	9.0	9.0	12.0	1.5	21.5	**334 446**
M8	0.5 – 3.0	11.0	11.0	15.0	1.5	23.5	**334 447**

We reserve the right to amend specifications at any time.

Slim head
Part Hex body
Open end

Material

Stainless steel 1.4578

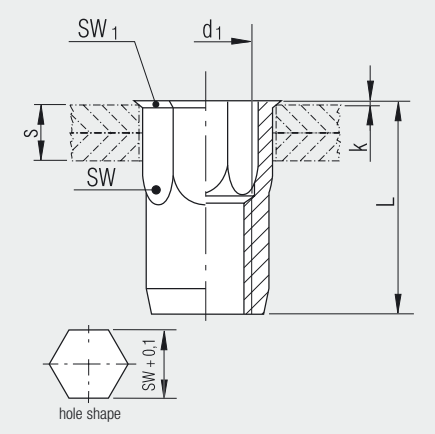

Thread d_1	Grip range s [mm]	Hole A/F [mm]	Body A/F SW [mm]	Head A/F SW_1 [mm]	Head height k [mm]	Body length L [mm]	Part No. Stainless steel
M 4	0.5 – 2.0	6.1	6.0	6.5	0.5	11.0	**–**
M 5	0.5 – 3.0	7.1	7.0	7.5	0.5	12.0	**334 438**
M 6	0.5 – 3.0	9.1	9.0	9.5	0.5	14.5	**334 433**
M 8	0.5 – 3.0	11.1	11.0	11.5	0.5	16.0	**334 435**

Slim head
Part Hex body
Closed end

Material

Stainless steel 1.4578

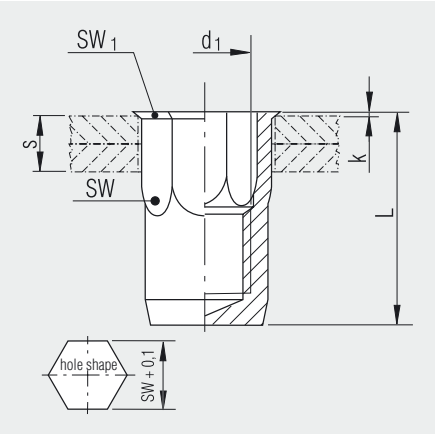

Thread d_1	Grip range s [mm]	Hole A/F [mm]	Body A/F SW [mm]	Head A/F SW_1 [mm]	Head height k [mm]	Body length L [mm]	Part No. Stainless steel
M 5	0.5 – 3.0	7.1	7.0	7.5	0.6	18.0	**334 437**
M 6	0.5 – 3.0	9.1	9.0	9.5	0.5	21.5	**334 439**
M 8	0.5 – 3.0	11.1	11.0	11.5	0.5	24.0	**334 441**

We reserve the right to amend specifications at any time.

Complementary products

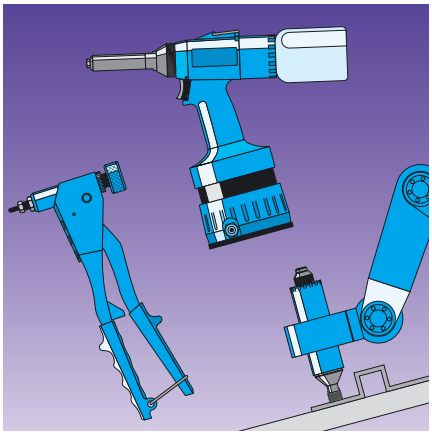

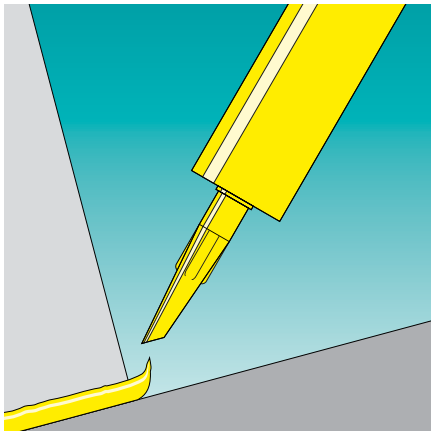

- Plastic accessories
- Installation tools
- Sealants and adhesives

Polystic System
plastic accessories

In addition to our stainless steel fasteners, we also offer a range of plastic accessories for use in such applications as the laying of pipe conduits, etc. They are fitted both on threaded studs and in open holes.

Please contact us for details. We offer a wide range of accessories for various fasteners for an equally wide range of applications.
We will also be pleased to cater for special applications, subject to a careful technical investigation of the proposed application.

TIOS® 220
Weight: 1.6 kg
F: 13 kN
max ø: 5.0 mm
Part No. 430 450 350 (ø 16 mm)
Part No. 431 450 250 (ø 19 mm)

We can supply tools especially for the installation of corrosion resistant, stainless steel fasteners.

MS 5
Weight: 1.6 kg
max ø: 5.0 mm
Part No. 431 605

MS 40 A
Weight: 1.7 kg
F: 15 kN
max ø: 8.0 mm
Part No. 431 299

MS 60
Weight: 2.6 kg
F: 18 kN
max ø: 8.0 mm
Part No. 431 500

MS 6 M
Weight: 2 kg
max ø: 6.4 mm
Part No. 431 360

MS 50
Weight: 2.2 kg
F: 23 kN
max ø: M12
Part No. 348 200

MS 100
Weight: 2.9 kg
F: 34 kN
max ø: M16
Part No. 348 300

MS 7
Weight: 1.2 kg
max ø: M6
Part No. 348 170

MS 75*
Weight: 1.9 kg
F: 24 kN
max ø: 8 mm
Part No. 385 060

MS 3
Weight: 0.7 kg
max ø: M6
Part No. 348 130

MS 9
Weight: 2.2 kg
max ø: M12
Part No. 348 190

At a glance

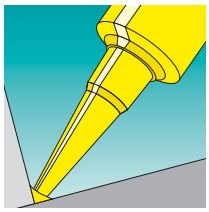

Sealants and adhesives

- Complete range for vehicle construction, OEM, trade and industry
- Top quality products
- All requirements met
- State-of-the-art product development

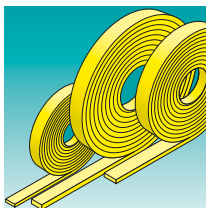

Sealing and adhesive tapes

- For cleanly sealing and bonding various materials
- Suitable for many applications
- Perfect as a fixing aid

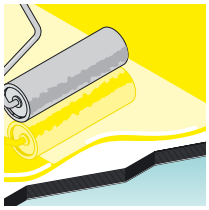

Floor covering systems

- Plastic or natural rubber coatings
- For vehicle floors, ramps, garages, horse stables and more
- Easy to lay
- Meets food safety requirements
- Very hard-wearing
- Jointless complete sealing system

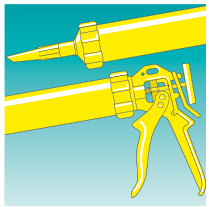

Application tools

- Mechanical, pneumatic, electric
- Tools for cartridges and pouches

See dedicated catalogue

Request your copy of our catalogue
“Construction elements for industrial use”!

Content

- Turntables
- Brake accessories
- Latches
- Battens
- Sheets, mats
- Bumpers
- Flap and cover braces
- Lashing straps
- Locks
- Continuous hinges
- Door hinges - 180°
- Door hinges - 270°
- Door retainers
- Grips and handles

Terms and conditions of delivery and payment

1. Period of validity of the Terms and Conditions

a) All deliveries, performances, sales and offers are provided exclusively on the basis of these Terms and Conditions of Delivery and Payment. These then apply to all future business relationships, even if they are not expressly agreed upon again.

b) We herewith expressly reject any general terms and conditions of trade of the Customer that contradict our Terms and Conditions of Delivery and Payment. Even if the Customer communicates its own terms, our Terms and Conditions of Delivery and Payment shall be deemed to come into effect at the latest upon receipt of the goods and performances. Letters of confirmation from the Customer shall not legally bind us, even if we do not expressly object to said letters.

c) Agreements or amendments that deviate from these Terms and Conditions of Delivery and Payment – irrespective of how and in what form – shall only then be legally binding if confirmed by us in writing.

d) The invalidity of any individual contractual provision shall not affect the validity of the Agreement. In the case of any provisions in these Terms and Conditions of Delivery and Payment being or becoming invalid or unenforceable, we shall have the authority to replace the invalid or unenforceable provision with a valid provision, the commercial purpose of which corresponds as closely as possible to that of the invalid or unenforceable provision.

2. Offer and conclusion of contract

a) Our offers are subject to change without notice and are non-binding. Letters of confirmation and all orders require our written confirmation to be legally valid. This confirmation can also be provided by fax or e-mail.

b) Drawings, illustrations, dimensions, weights or other performance data shall only be binding if this is expressly agreed in writing.

c) We retain all ownership and copyrights to all technical documentation. Such documents must not be made available to any third parties without our prior consent.

3. Prices

a) The prices in our Confirmation of Order plus the applicable statutory value added tax shall apply. Authoritative for the calculation of prices shall be the weights, numbers of units and square meter figures determined by the Vendor. Additional deliveries and performances not contained in our Confirmation of Order shall be invoiced separately.

b) The prices quoted shall be valid ex-factory without packaging and freight. These will be invoiced separately. Packaging will not be taken back unless a statutory obligation to do so applies.

c) If substantial increases in the prices of raw materials or energy occur within the space of contracts with an agreed delivery period of more than four months, the parties to the Agreement undertake to renegotiate the purchase price. If no agreement can be reached, the parties to the Agreement shall be entitled to withdraw from the Agreement. No further claims shall then be valid (e.g. for damages or repayment of expenses).

4. Period of delivery and performance

a) Delivery periods and deadlines shall be subject to alteration without notice, unless a written agreement to the contrary is made.

b) The delivery deadline shall be postponed appropriately for the duration of the disturbance, in cases of force majeure, industrial disputes, riots, official intervention, failure to deliver on the part of our suppliers and other unforeseeable, unavoidable and substantial occurrences. We shall be obliged to the Customer, to an equitable degree, to pass on the required information immediately and to adjust its obligations in good faith to the changed situation.

c) If the hindrance lasts longer than three months, the Customer shall be entitled to withdraw from the Agreement due to the unfulfilled part of said Agreement, after providing a fair extension of the deadline. If it should be or become impossible to dispatch the goods due to extraordinary circumstances for which we are not responsible, we shall be authorized, notwithstanding immediate billing, to store said goods elsewhere for the account and at the risk of the Customer, should our storage facilities not suffice.

d) We shall be entitled to partial deliveries and performances at all times. For purchases made for call-off, the call-offs shall be made as evenly and continuously as possible, in as much as no other agreement has been made. Once the acceptance period is over, remaining amounts can be cut, notwithstanding the ability to claim for damages. Goods produced but not called-off by the end of the acceptance period shall be billed as of the end of the acceptance period. We shall be entitled to store such goods elsewhere at the cost and risk of the Customer.

e) The passing of delivery periods and deadlines will not relieve the Customer wishing to withdraw from the Agreement or demand damages for non-fulfillment, from having to allot a reasonable period within which to make performance - as a rule three weeks – or from declaring that it will reject the performance if the deadline has been missed.

5. Passage of risk

When delivering objects, the risk shall pass to the Customer as soon as the object being delivered is transferred to the person effecting the transport, or leaves our warehouses for shipping. We shall choose the route and type of shipping. The freight will be invoiced at the freight rates valid on the day of billing. Any increase in the freight costs caused by subsequent alterations to the type of shipping, transport route, destination or similar factors pertaining to the freight costs shall be borne by the Customer, inasmuch as the Customer induced these changes. In the case of customers who pick up the goods themselves, risk shall pass to the Customer at the agreed place of delivery.

6. Warranties

a) For defects as provided for by § 434 BGB (German Civil Code) we shall only be liable as follows: The Customer undertakes to inspect the goods received immediately with regard to amount and quality. Obvious defects are to be reported to us in writing within a period of 14 days. In the case of mutual commercial acts between businessmen, §§ 377, 378 HGB (German Commercial Code) shall remain unaffected.

b) If the Customer finds a defect in the goods, it shall not be authorized to dispose over the goods, i.e. it may not split, resell or further process the goods until agreement has been reached as to how to deal with the complaint or an independent taking of evidence has been carried out.

c) The Customer undertakes to inform us immediately of any damage incurred during transport. The Customer shall take care of the required formalities with the Carrier.

d) In the case of justified complaint, we shall be entitled to choose whether to rectify the defective goods or to provide substitute delivery. Multiple rectifications shall be permitted.

e) The warranty does not include damage caused by false information from the Customer, storage not in accordance with instructions or defective processing or use of the goods.

f) If it is impossible to eliminate the defect or effect the substitute delivery within the appropriate period of grace provided by the Customer, the Customer, who is not the consumer, shall only have the right to either withdraw from the Agreement or reduce the purchase price.

g) If the Customer does not give us the opportunity and a fair amount of time to convince ourselves of the defect and carry out the required subsequent fulfillment (rectification or replacement delivery), any claims arising from the deficiency shall become invalid.

7. Limitation of liability

a) We shall be liable in the case of intent, gross negligence or violation of substantial contractual obligations, as well as when promised quality is not delivered. Claims otherwise not expressly stipulated in these Terms will not be valid, and in any case shall not exceed the damage foreseeable at the time of closure of the Agreement, or the value of the delivered goods.

b) Inasmuch as our liability is excluded or restricted, this shall also apply to the personal liability of our employees, legal agents and assistants. In cases of gross negligence by simple vicarious agents, we shall be liable for reimbursement of the typical, foreseeable damage.

c) The legal provisions regarding burden of proof shall remain unaffected by this.

d) The above provision shall not apply to claims under the product liability law for personal injury or damage to privately used property.

8. Statutory limitation

All claims made by the Customer – for whatever legal reasons – shall be time-barred in 12 months. The statutory limitation times shall apply to intentional or fraudulent behavior and claims stemming from the product liability law.

9. Payment

a) Inasmuch as no other agreements are reached, all payments shall be due in net within thirty days of the date of invoice. We grant a 2 % discount for cash and book payments made within ten days of the date of invoice.

b) We expressly reserve the right to refuse checks and bills of exchange. Acceptance is always on account of performance. Discount and bill charges shall be at the expense of the Customer and due immediately. Excluding §§ 366, 367 BGB, and despite stipulations of the Customer to the contrary, we shall determine which claims are settled by the Customer's payment. Upon delay of performance, we shall be entitled to demand the ordinary bank interest rate, but not less than 8 % above the base interest rate in accordance with § 1 of the discount rate transitional law of June 09, 1998.

10. Retention of ownership

a) We shall retain ownership of the delivered goods until full payment of the purchase price has been received. In the case of goods that the Buyer receives from us within the scope of an ongoing business relationship, we shall retain ownership until all claims against the Buyer stemming from this business relationship have been satisfied, including claims arising in the future from other agreements made at the same time or later. This shall also apply when individual or all claims have been recorded in an ongoing invoice and the balance drawn and confirmed by the Customer. If a bill of exchange liability is founded by the Buyer in the context of the payment of the purchase price (check, bill of exchange), the retention of ownership shall not expire before the Customer honors the bill of exchange as drawee. In the case of overdue payment by the Customer, we shall be entitled to repossess the goods subsequent to a reminder, and the Buyer will be obliged to surrender possession.

b) If the conditional commodity is processed into a new piece of movable property, the further processing shall be done for us, without any obligations arising for us: the new commodity shall become our property. In the case of processing together with goods not belonging to us, we shall acquire co-ownership of the new object to a degree in relation to the value of the conditional commodity to the other goods at the time of processing. If the conditional commodity is joined, commingled or mixed with goods not belonging to us, as stipulated in §§ 947, 948 BGB, we shall become co-owners in accordance with the legal provisions.
If the Customer acquires sole ownership on the basis of the joining, commingling or mixing, co-ownership to the extent of the value of the conditional commodity in relation to the other goods at the time of joining, commingling or mixing transfers to us now, in advance. In such cases, the Customer shall be obliged to store the object of which we are owner or co-owner, which is also a conditional commodity in the sense of the above stipulations, at no cost.

c) If the Customer sells the conditional commodity alone or in connection with goods not belonging to us, the customer assigns to us now, in advance, the value of the conditional commodity as generated from the sale, along with all other rights and ranked before all others. We accept this assignment. The value of the conditional commodity is the sum resulting from our invoice, which, however, remains out of the valuation as soon as third-party rights conflict. If the resold conditional commodity is in our ownership, the assignment of the claims shall include the sum that corresponds to the value of the share of the co-ownership.

d) The customer shall only be entitled and authorized to resell, use or process the conditional commodity within the scope of ordinary business activities and only on the condition that the claims as stipulated in the paragraphs above are in actual fact assigned to us. The Customer is not authorized to any other disposition over the conditional commodity, in particular pledging or assignment as security.

e) Reserving the right to revoke, we authorize the customer to collect the claims assigned to us in accordance with paragraphs c) and d). We will not exploit our own right of collection, as long as the Customer covers its payment obligations – also towards third parties. If requested by us, the Customer shall name the obligors of the assigned claim and notify them of the assignment. We shall also be authorized to notify the obligors of the assignment. The Customer undertakes to inform us immediately, also informing us of the documents required for an objection, as to any levies upon the conditional commodity by third parties.

f) The right of resale, the right to use or process the conditional commodity or the authorization to collect the assigned claims shall lapse with stoppage of payments and/or application for the opening of insolvency procedures. In the case of a check or bill protest, the authorization to collect shall also lapse. This does not apply to the rights of the insolvency administrator.

g) If the value of the securities offered exceeds the claims (where applicable reduced by deposits and part payments) by more than 20 %, we shall be obliged to reassign or release the securities as we choose. Once all claims from the business relationship have been settled, the ownership of the conditional commodity and the assigned claims shall transfer to the Buyer.

11. Data protection

The Customer is herewith informed that we deal with person-related data gained within the scope of our business relationship in accordance with the provisions of the Federal Data Protection Law.

12. Place of performance, place of jurisdiction and applicable law

a) Osnabrück in Germany shall be the place of performance for both parties for delivery, performance and payment for all rights and obligations arising from the Agreement.

b) The sole place of jurisdiction for all disputes arising directly or indirectly from the contractual relationship shall be Osnabrück in Germany (also for bill of exchange, check and other documentation processes.

c) Solely the laws of the Federal Republic of Germany shall apply for these Terms and Conditions and all legal relationships between us and the Customer. The UN agreement on contracts of international merchandise sales of April 11, 1980 shall in no case apply.

Osnabrück, September 01, 2003

ISO 9001:2008

DEKRA Certification

DEKRA

Certified

Quality Management

We are certified

Voluntary participation in regular monitoring according to ISO 9001:2008

Gebr. TITGEMEYER GmbH & Co. KG
Hannoversche Straße 97
(Navigation: Hettlicher Masch 2)
49084 Osnabrück. Germany
P.O. Box 43 20
49033 Osnabrück. Germany
Telephone: +49 (0)5 41/58 22-0
Telefax: +49 (0)5 41/58 22-491
E-Mail: export@titgemeyer.com
www.titgemeyer.com